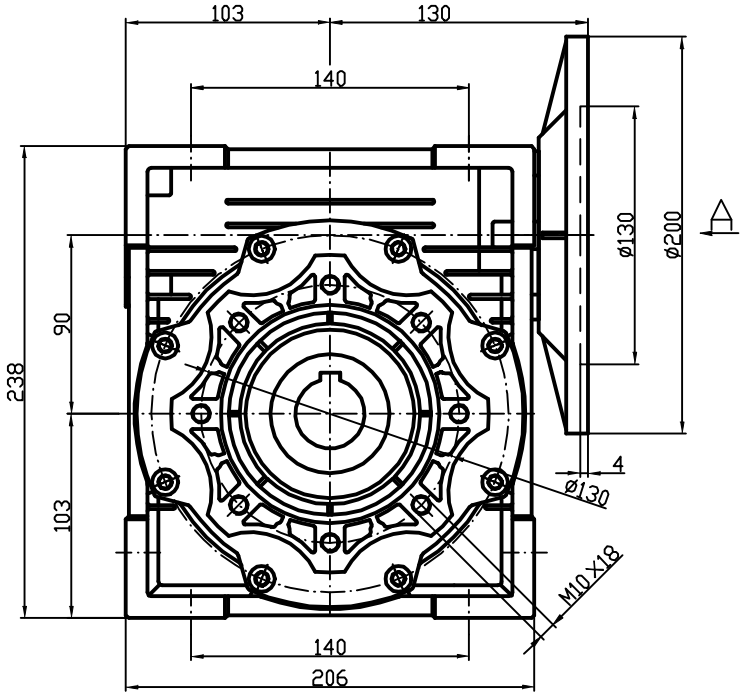

A side

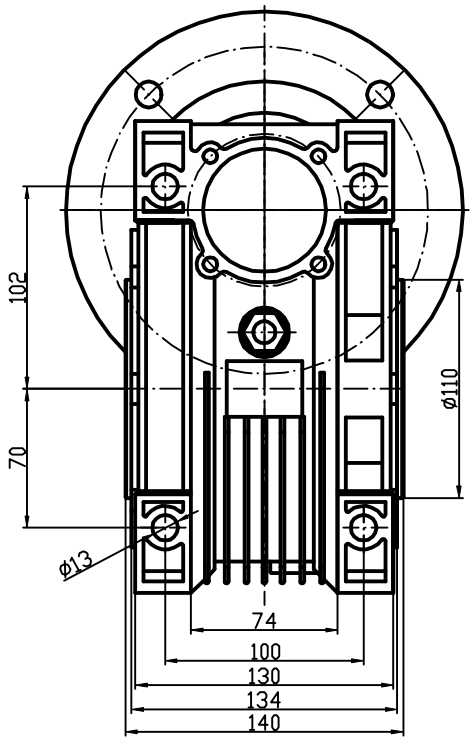

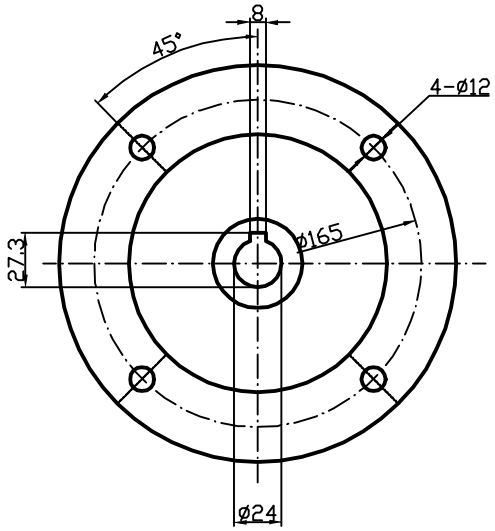

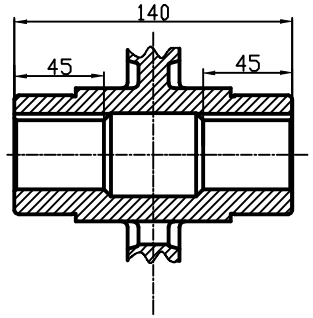

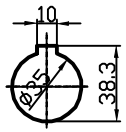

EGM90-90B5