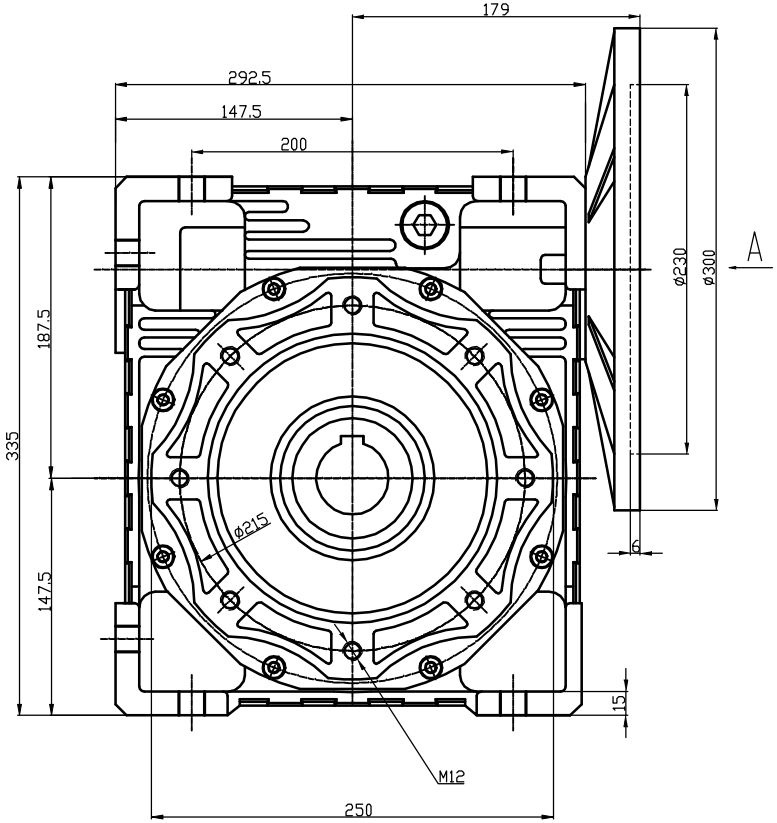

Aside

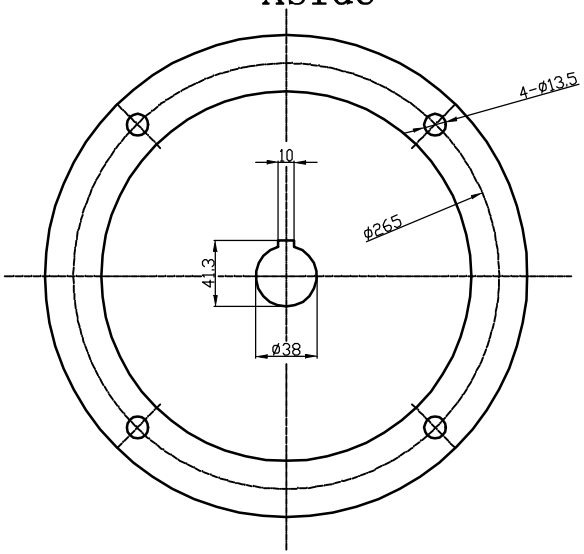

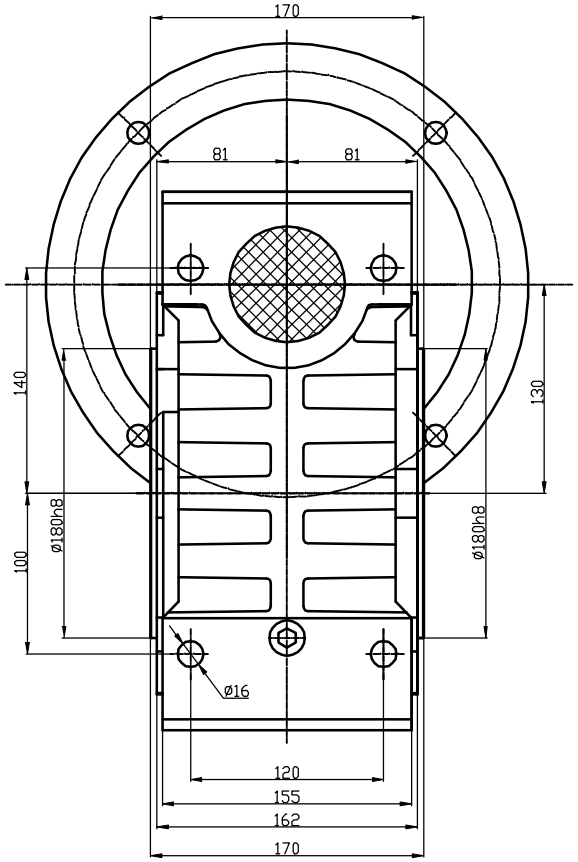

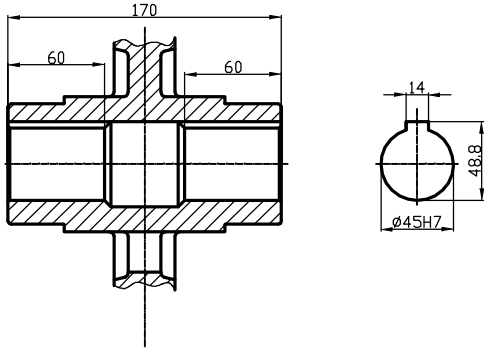

EGM130-132B5